AUTOZINE TECHNICAL SCHOOL

Continuous Variable Valve Lift (CVVL)

The earliest variable valve lift systems like Honda VTEC vary valve lift by switching between slow and fast cams at a threshold point. Such discrete mechanism not only creates a step in the power curve (which is perceived as “unrefined”) but its breathing is also a compromise. An ideal variable valve lift (VVL) system should be capable of varying valve lift continuously according to rev, i.e., the higher the rpm, the higher lift is required. Compare with a fixed valve lift compromised for mid-range rev, VVL enhances power at high rev by supplying the engine more air to breath. At low rpm, its reduced valve lift speeds up the air flow, improving air / fuel mixture thus translate to better fuel economy and cleaner emission. Moreover, car makers can make use of CVVL to regulate engine output, thus eliminate the need of throttle butterfly and reduce so called “pumping loss” (see more info in our Green Technology section).

Example: BMW Valvetronic

Debuted in BMW 316ti Compact in 2001, Valvetronic was the first continuous variable valve lift mechanism made into production. Instead of enhancing power, the goal of Valvetronic was to reduce fuel consumption. According to the position of throttle pedal, it regulates engine output by varying the depth of valve lift. This mean conventional throttle butterfly can be disabled thus reduces pumping loss. Overall, BMW achieved 10% reduction in fuel consumption with Valvetronic.

Compare with a conventional engine, Valvetronic adds an electric motor, an eccentric shaft and at each intake valve an intermediate rocker arm. The intake camshaft acts on the intermediate rocker arms through roller bearings. When the driver calls for more power, the electric motor turns the eccentric shaft, which pushes the intermediate rocker arms and in turn pushes the valve to open deeper. You can understand its theory easily by reading the illustrations below.

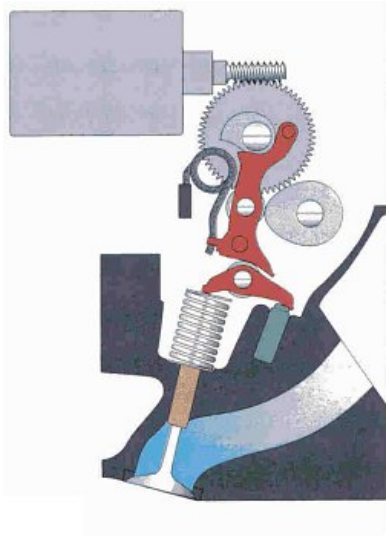

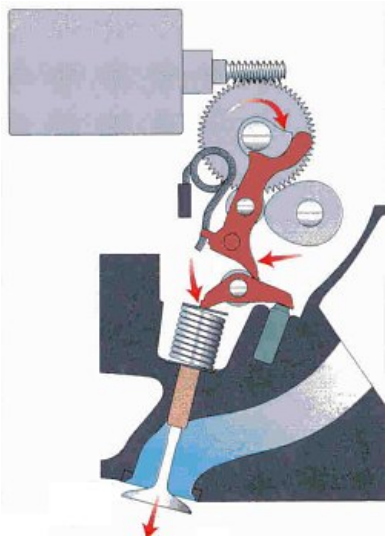

Although Valvetronic is effective to reduce fuel consumption at part-load, it does not benefit top end power at all, because its additional components result in additional friction and inertia, thus limit the engine’s revvability. This is why BMW has never applied Valvetronic to its high-performance M-power engines. Another disadvantage is its size, which occupies a lot of space above the cylinder head.

Advantage	Reduce fuel consumption
Disadvantage	Large size, additional friction and inertia thus not suitable to high-revving engines
Who use it ?	BMW inline-4, inline-6, V8 and V12

Example: Nissan VVEL

Nissan introduced its Variable Valve Event and Lift (VVEL) in 2007 as the world's second CVVL system. The first application was on the VQ37VHR V6 engine of Skyline Coupe (Infiniti G37). Compare with BMW's Valvetronic, Nissan's system is more compact, involve less parts and less energy loss, therefore it is suitable to high-performance engines.

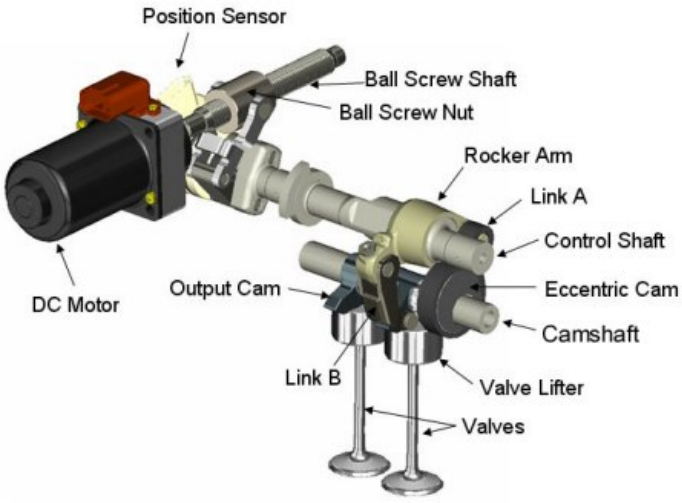

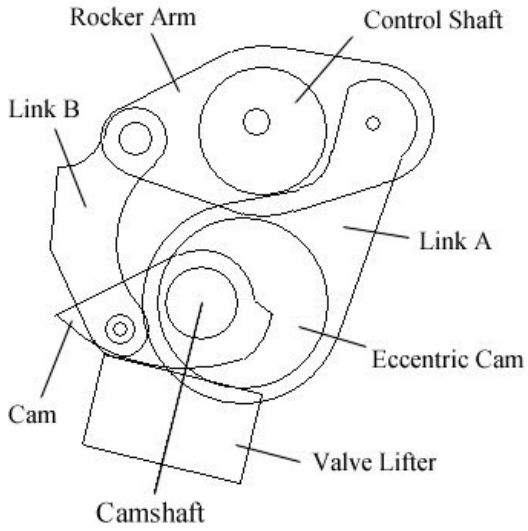

Though saying VVEL employs less parts, it is still a complicated design and not easy to understand. The above diagrams show its internal construction, which doesn't look like conventional valve gears at all. The VVEL does not use conventional intake camshaft. Each valve is actuated by a cam which is pivoted on - but not fixed to - the camshaft. While conventional cams rotate about the camshaft, the cam in VVEL swings up and down reciprocatingly, this is why it does not need a symmetric profile. Its movement is driven by the camshaft via a series of components, i.e. eccentric cam (which is fixed at the camshaft), link A, rocker arm and link B. Isn't it very complicated ? The following animation will help you understand how it operate:

Low Lift

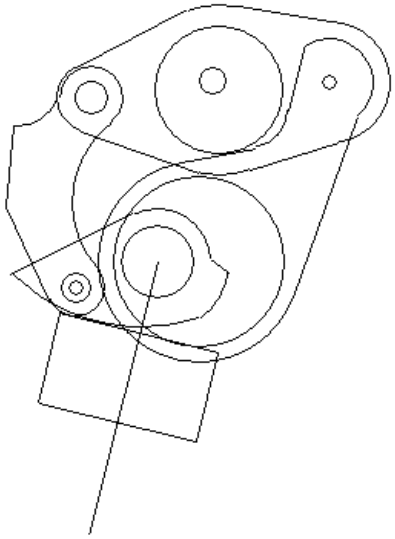

High Lift

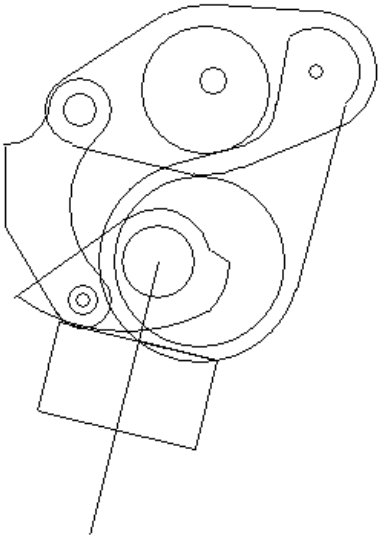

How does VVEL vary valve lift ? This is implemented by the eccentric control shaft inside the rocker arm. By rotating the eccentric control shaft, the position of rocker arm is shifted, changing the geometry of Link A and B, then the swing angle of cam. The swing angle of cam determines the degree of valve lift, as you can see from the above diagrams.

Nissan said VVEL saves 10% fuel at light load due to the reduced role of throttle butterfly (it does not eliminate throttle completely), but it did not specify how much gain in horsepower. The VQ37VHR produces 8 percent more horsepower than its predecessor, the non-VVEL VQ35HR. Taking its increased displacement and compression ratio into account, VVEL seems to contribute little to top end power. This is because its benefit in breathing efficiency is largely cancelled out by the additional friction of VVEL components. However, the VQ37VHR engine can rev up to 7500 rpm, proving that VVEL does not compromise top end performance like BMW Valvetronic.

Advantage	Enhanced power at high rev. Save fuel by eliminating throttle butterfly.

Disadvantage	Mechanism still complicated, bulky and expensive.
Who use it ?	Nissan VQ37VHR V6

Example: Toyota Valvematic

Toyota joined the CVVL club in 2008 with its Valvematic technology. Compare with BMW Valvetronic and Nissan VVEL, Valvematic seems better in many aspects: its construction is relatively simple; It is compact and does not increase the height of cylinder head; Most importantly, it adds little inertia and friction, thus does not compromise top end power. Toyota claims it improves 10% in power output while reduces 5-10% fuel consumption in regular driving.

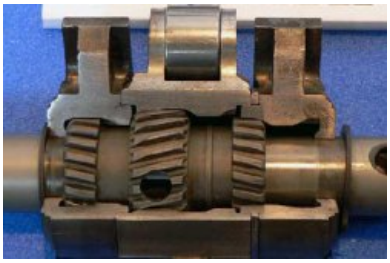

Valvematic employs an intermediate shaft (blue part in top left picture) to achieve continuous variable valve lift. The intermediate shaft has an actuating member for each cylinder. Each actuating member is made of two finger followers laminating a roller bearing member (top right picture). The finger followers can rotate in relation to the roller member by means of internal gear threads and an electric motor attached to the end of the intermediate shaft. Note that the gear threads of roller member and finger followers are in opposite direction. This mean when the shaft swivels, the roller member and finger followers will move in opposite direction, moving either apart or closer together. In this way, the axle angle between them can be varied infinitely by the electric motor.

Now see the picture below. The intake valve is actuated by camshaft via intermediate shaft. More precisely speaking, the camshaft acts on the roller member of intermediate shaft, transferring the movement to both finger followers, then towards the roller rocker arms and eventually to the intake valves.

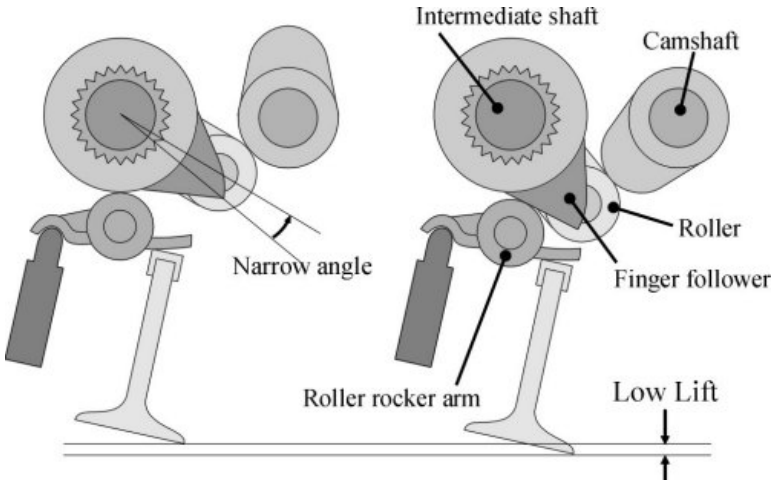

As you can see from the picture above, when the finger follower is set at narrow angle in relation to the roller member, it results in low valve lift. When the angle of finger follower is increased (picture below), the valve lift is also increased. In this way, Valvematic can vary valve lift by adjusting the angle of finger followers. In the first 2.0-liter Valvematic engine, lift can vary from 0.97mm to 11mm. The former saves the need of throttle butterfly thus reduce fuel consumption in part load. The high lift enables stronger top end power. Take the 2.0-liter Valvematic engine as example again, it produces a maximum 158 horsepower, up from 143 hp of the regular dual-VVT-i version.

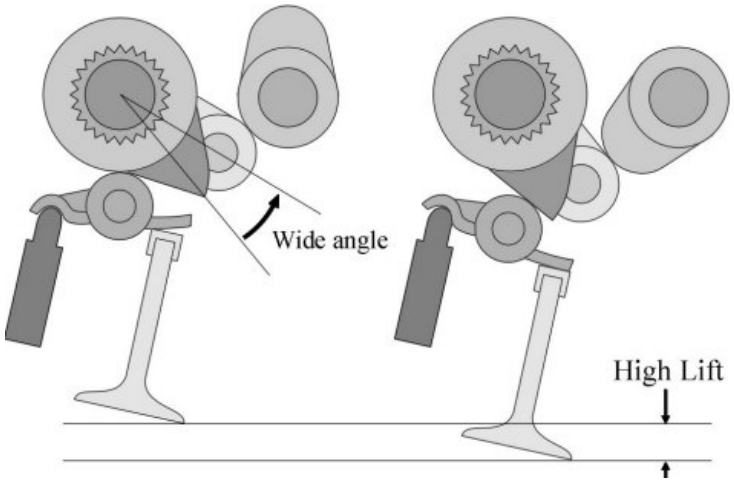

Advantage	Increased power, reduced fuel consumption, compact size.
Disadvantage	-
Who use it ?	Toyota 1.6 / 1.8 / 2.0 Valvematic engines

NEXT

Copyright© 1997-2011 by Mark Wan @ AutoZine